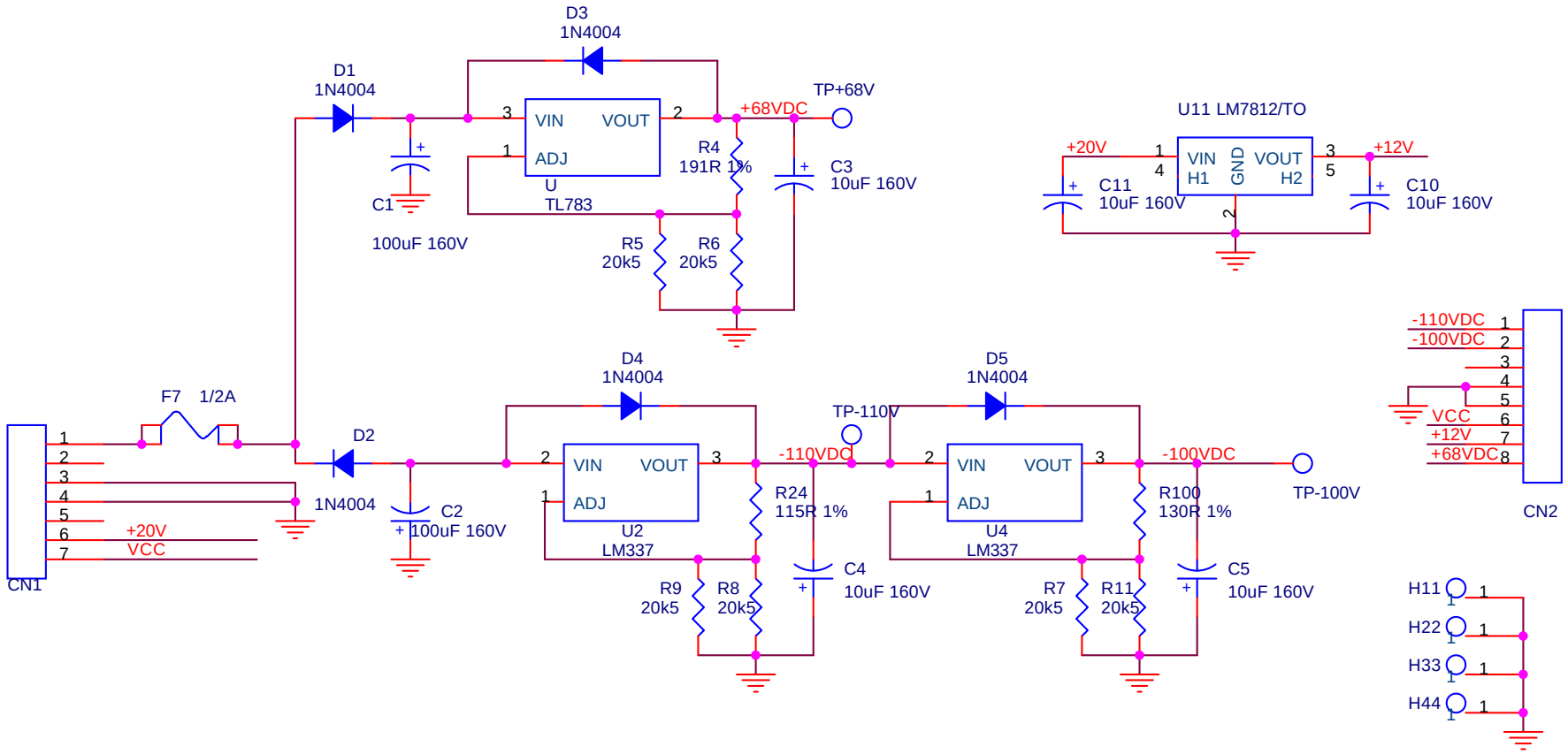

Note: U11, C11 &C10 not populated as per original design

Title	**Whitestar Power Supply**	
Size A	Document Number **WSPS01**	Rev 2
Date: Tuesday, March 06, 2018	Sheet 1 of 1	