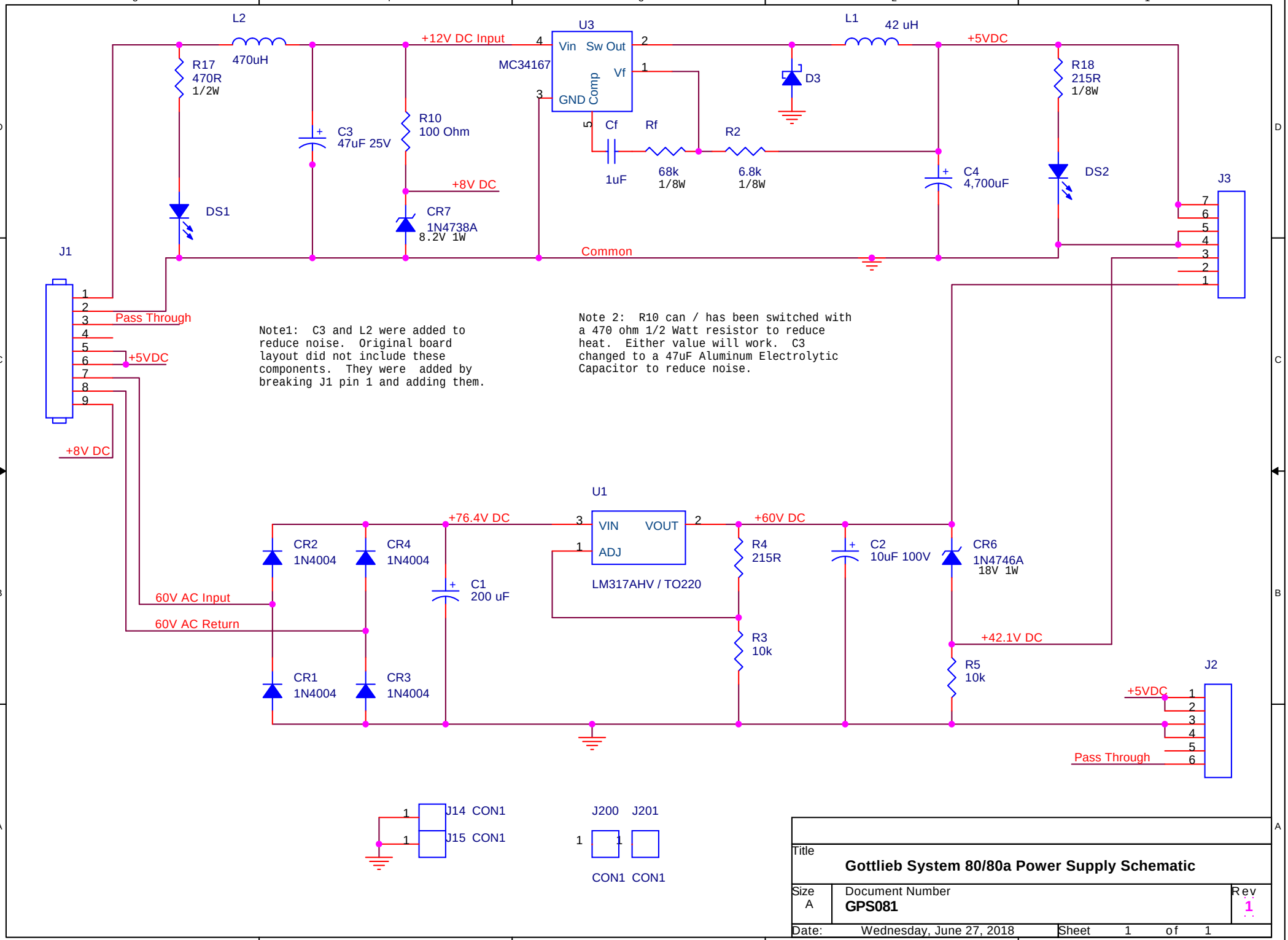

Title
Gottlieb System 80/80a Power Supply Schematic

Size	Document Number	Rev
A	**GPS081**	1

Date: Wednesday, June 27, 2018 Sheet 1 of 1